Eddy current benchmark data for an edge crack configuration

N. Poulakis[(1)] and T. Theodoulidis[(2)]

[(1)] Technological Educational Institute of Western Macedonia, Department of Electrical Engineering
[(2)] University of Western Macedonia, Department of Mechanical Engineering
MEANDER group, Kozani, 50100 Greece

DESCRIPTION OF EXPERIMENT

The impedance of a cylindrical probe coil is measured when the coil is moved parallel to the edge of a thick aluminum block with EDM notches that run perpendicular to the edge line as shown in Fig.1. The block is sufficiently large compared to the coil and scan dimensions so that it can be represented as a conductive quarter-space. The coil is moved by a precision XY scanner and the measurements are made using the precision LCR bridge Agilent 4284A.

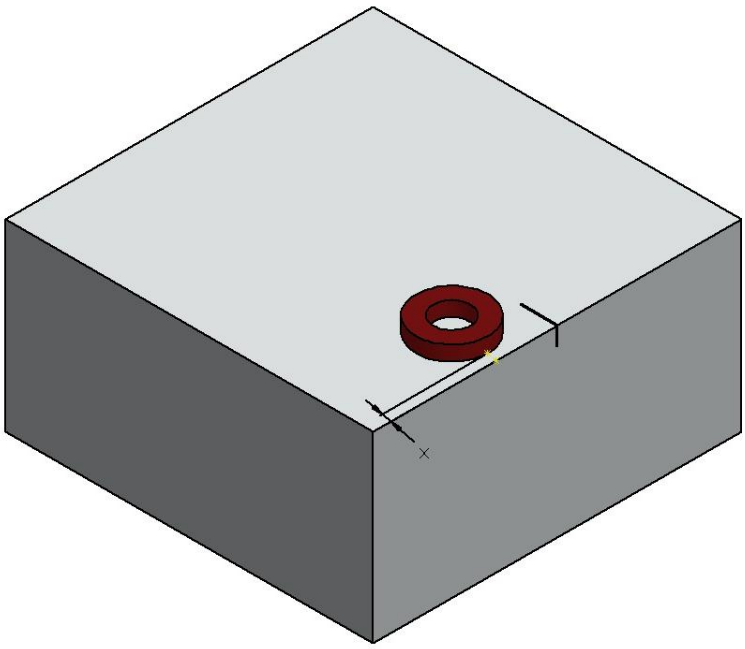

Fig.1 Experimental configuration, *x* denotes the coil distance from the edge (0 or 2mm).

The block conductivity is measured using the conductivity mode of GE Phasec 2-D eddy current instrument and is found 17.7MS/m±0.6MS/m. However, such a range is large, so frequency scan measurements in the middle of the block area are fitted to theoretical evaluations [1]-[2] obtained from the Dodd and Deeds model. The exact values of block conductivity and coil lift-off are found to be 17.0 MS/m and lift-off 1.08mm respectively.

The coil is wound with a self-bonding wire (0.2mm diameter) and does not have a former. The coil has inner radius 5.0mm, outer radius 9.7mm, height 4.0mm and 407 wire-turns. The isolated coil inductance is measured to 2.237mH and is calculated to 2.233mH.

The coil is moved incrementally along a line parallel to the edge with the coil first flush to the edge (x=0) and then 2mm inbound from the edge.

There are two notches (at different edges of the block) that represent edge cracks, with the following dimensions:

Crack A: length×depth×width=4.98mm×5.00mm×0.160mm

Crack B: length×depth×width=10.00mm×4.99mm×0.175mm

The coil impedance is measured as a function of position at 1 and 10kHz. Part of these measurements (crack B) were presented in [3].

DATA FILES

Since we have measurements for 2 cracks, at 2 frequencies and 2 coil line scans, we end up with 8 sets of experimental data. All of them are named as follows:

Crack_frequency_x.txt

and are created by considering that:

Crack is the character A or B (corresponds to cracks A and B)
frequency is the number 1 or 10 (corresponds to the frequency choice in kHz)
x is the number 0 or 2 (corresponds to the distance of the coil from the edge line in mm)

All files have three columns, where the first column is the distance travelled by the coil, the second column is the total resistance (in Ohm) and the third column is the total inductance coil (in Henry), respectively. Note that:

- The scan is 60mm long and the crack lies in the middle of the scan at 30mm.
- The third column should be multiplied with the angular frequency in order to get the total inductive reactance of the coil.
- We are interested in the impedance change due to the crack, therefore we need to subtract from the measurements a coil impedance value when the coil is far away from the crack (background impedance).

Figs 2-5 depict the edge crack signal (after the subtraction of the background impedance) both as a function of the coil travel distance and also in the complex plane representation.

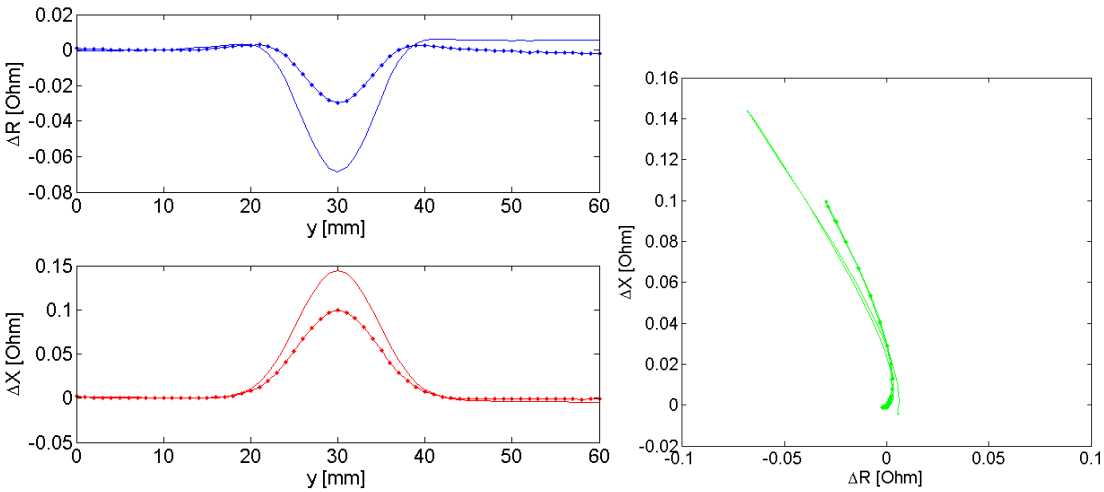

Fig.2 Experimental data for Crack A at 1kHz frequency. Real and imaginary parts (left) and complex plane representation (right). Solid lines correspond to *x*=0mm and dotted lines to *x*=2mm distance of coil from edge.

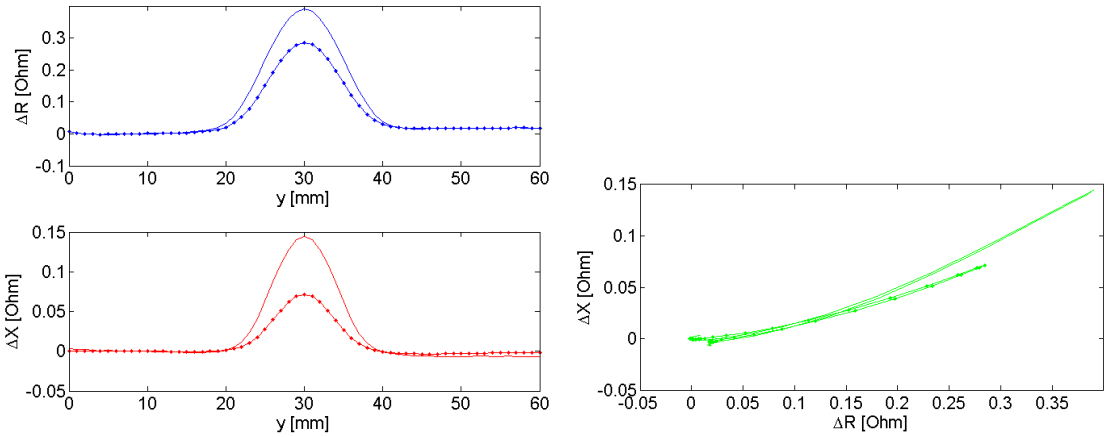

Fig.3 Experimental data for Crack A at 10kHz frequency. Real and imaginary parts (left) and complex plane representation (right). Solid lines correspond to *x*=0mm and dotted lines to *x*=2mm distance of coil from edge.

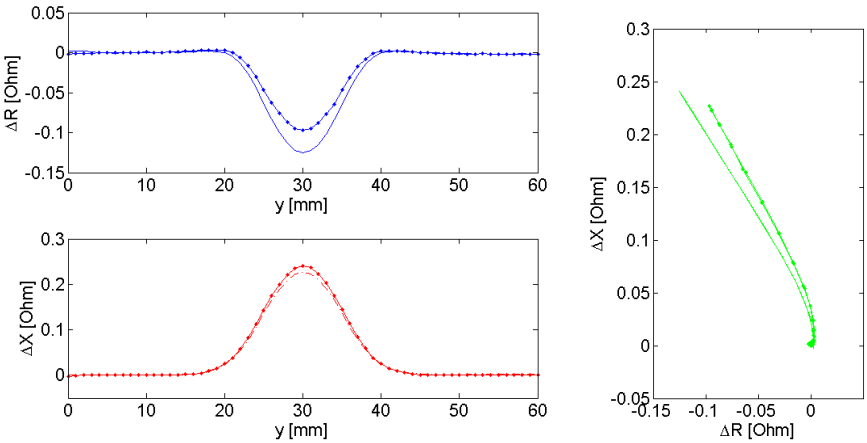

Fig.4 Experimental data for Crack B at 1kHz frequency. Real and imaginary parts (left) and complex plane representation (right). Solid lines correspond to *x*=0mm and dotted lines to *x*=2mm distance of coil from edge.

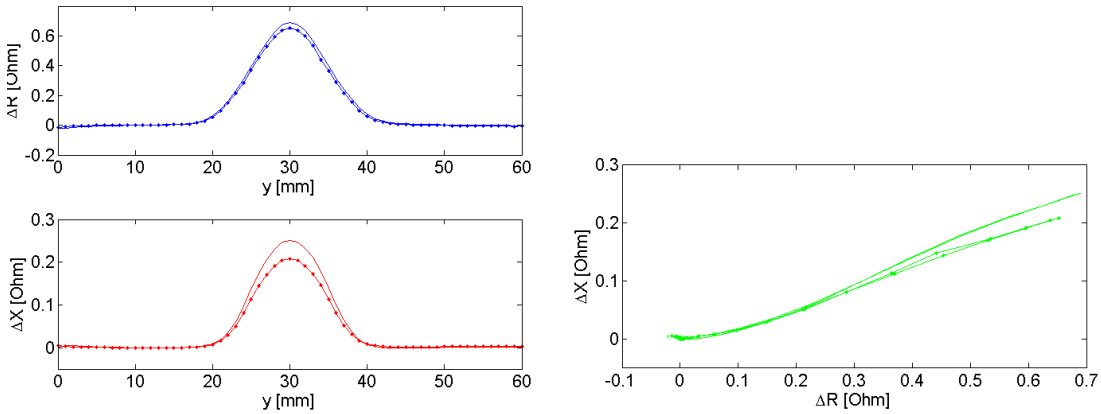

Fig.5 Experimental data for Crack B at 10kHz frequency. Real and imaginary parts (left) and complex plane representation (right). Solid lines correspond to *x*=0mm and dotted lines to *x*=2mm distance of coil from edge.

References

[1] D.J. Harrison, L.D. Jones, S.K. Burke, "Benchmark problems for defect size and shape determination in eddy-current nondestructive evaluation", *IEEE Transactions on Magnetics*, Vol.15, No.1, pp.21-34, 1996.

[2] T.P. Theodoulidis, E.E. Kriezis, "Series expansions in eddy current nondestructive evaluation models", *Journal of Materials Processing Technology*, Vol.161, pp.343-347, 2005.

[3] J.R. Bowler, T.P. Theodoulidis, N. Poulakis, "Eddy current probe signals due to a crack at a right-angled corner", *IEEE Transactions on Magnetics*, Vol.48, No.12, pp.4735-4746, 2012.